Building Inspection Division
Lakeland
THESE PLANS HAVE BEEN REVIEWED FOR COMPLIANCE WITH THE CURRENT EDITION OF THE FLORIDA BUILDING CODE
Date: 11/15/19
Permit Number: BLD19-06035

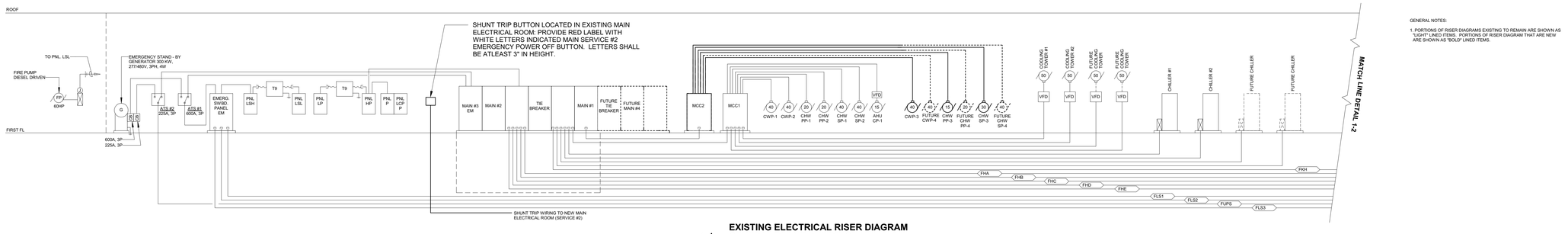

GENERAL NOTES:

1. PORTIONS OF RISER DIAGRAMS EXISTING TO REMAIN ARE SHOWN AS "LIGHT" LINED ITEMS. PORTIONS OF RISER DIAGRAM THAT ARE NEW ARE SHOWN AS "BOLD" LINED ITEMS.

1 | EXISTING ELECTRICAL RISER DIAGRAM CENTRAL PLANT BUILDING

E4-1-01 | Scale: N.T.S.

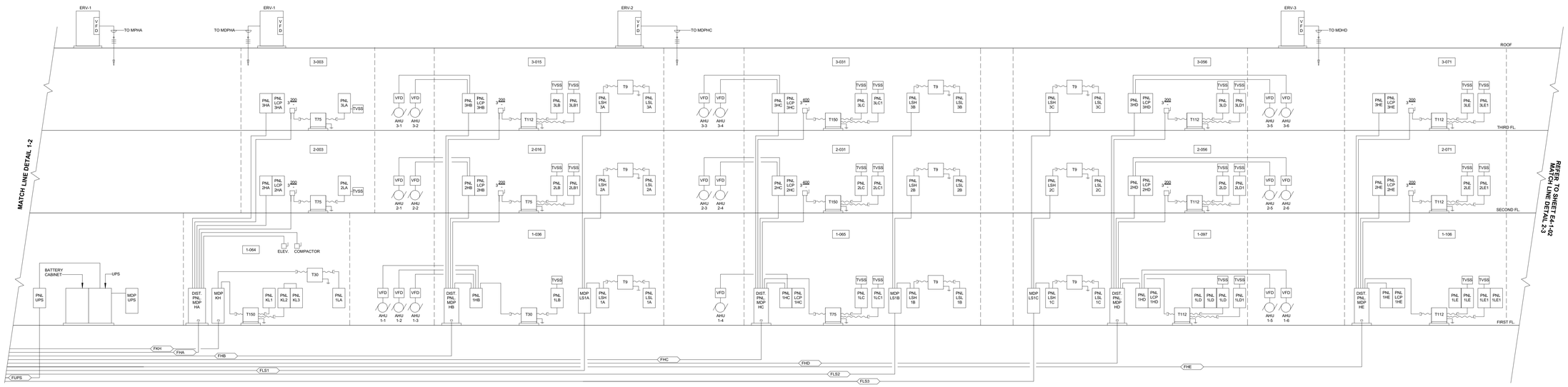

2 | EXISTING ELECTRICAL RISER DIAGRAM OFFICE BUILDING

E4-1-01 | Scale: N.T.S.

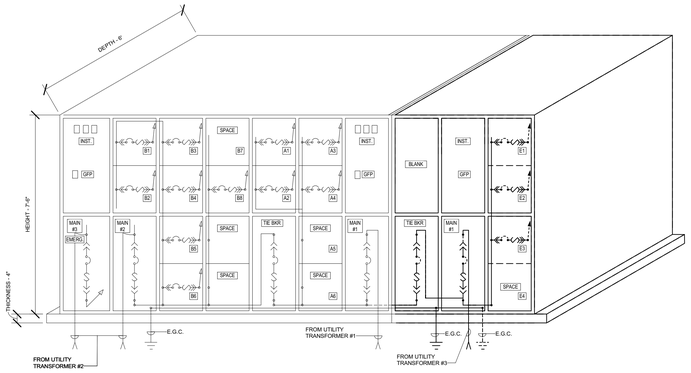

4 | EXISTING AND NEW MAIN SWITCHGEAR ELEVATION

Scale: N.T.S.

GENERAL NOTES:

1. ALL ELEMENTS OF EXISTING RISER DIAGRAM ARE SHOWN FOR REFERENCE PURPOSES ONLY. THE EXTEN OF WORK IN MODIFYING THE EXISTING IS AS FOLLOWS:
   A. UTILIZE EXISTING SPARE MAIN SWITCHBOARD BUCKET TO PROVIDE NEW CIRCUIT BREAKER TO FEED NEW MCC2.
   B. UTILIZE EXISTING SPARE CIRCUIT BREAKER IN LIFE SAFETY PANEL EM TO FEED NEW EMERGENCY LIGHTING DISTIBUTION PANEL MDP-LS1D.
   C. PROVIDE SHUNT TRIP BUTTON AND WIRING IN EXISTING MAIN ELECTRICAL ROOM FOR SHUT DOWN OF NEW MSB2 LOCATED IN EXPANSION
2. PROVIDE NEW 800 AMP 3 POLE 480 VOLT CIRCUIT BREAKER IN EXISTING MAIN #1 SECTION.
3. EXTEND 2 PARALLEL RUNS OF (4) 500 KCMIL COPPER AND (1) 1/0 AWG COPPER EQUIPMENT GROUND EACH RUN FROM MAIN #1 TO MCC2.
4. THERE ARE (2) EXISTING 3-1/2" CONDUITS EXTENDED FROM EXISTING MAIN ELECTRICAL ROOM TO A HANHOLE LOCATED OUTSIDE OF NEW EXPANSION. UTILIZE CONDUITS AS REQUIRED FOR MDP LS1D FEEDER AND SHUNT TRIP CONDUCTORS. UTILIZE INNER DUCT TO PROVIDE SEPARATION.
5. PER SPECIFICATIONS SECTION 260913 - ELECTRICAL POWER MONITORING AND CONTROL AND IN ACCORDANCE WITH ASHRAE 90.1 SECTION 8.4.3 ELECTRICAL ENERGY MONITORING, THE ELECTRICAL CONTRACTOR SHALL PROVIDE BRANCH CIRCUIT POWER MONITORING EQUAL TO POWERLINK MVP SERIES OR APPROVED EQUAL. THE FOLLOWING CATEGORIES SHALL BE MONITORED SEPARATELY TO PROVIDE TOTAL USAGE FOR EACH CATEGORY LISTED:
   A. TOTAL ELECTRICAL ENERGY OF BUILDING (MAIN SWITCHBOARD SWBD1)
   B. HVAC SYSTEMS
   C. INTERIOR LIGHTING
   D. EXTERIOR LIGHTING
   E. RECEPTACLE CIRCUITS

AECOM
BATSON-COOK CONSTRUCTION

PROJECT

PUBLIX HEADQUARTERS BUILDING ADDITION AND PARKING LOT EXPANSION

3300 PUBLIX CORPORATE PARKWAY
LAKELAND, FL 33811

CLIENT

Publix

3300 PUBLIX CORPORATE PARKWAY
LAKELAND, FL 33811

www.publix.com

CONSULTANT

AECOM

AECOM TECHNICAL SERVICES, INC.
800 Douglas Entrance
North Tower, 2nd Floor
Coral Gables, FL 33134
305.444.4691 tel 305.447.3580 fax
www.aecom.com

ARCHITECTURE
LICENSE NO. AA26000687

ENGINEERING
CA LIC. NO. 8115

http://www.aecom.com

REGISTRATION

HENRYK B. JUSZCZYK LICENSE NO. 58082 STATE OF FLORIDA PROFESSIONAL ENGINEER

HENRYK B. JUSZCZYK, PROFESSIONAL ENGINEER, STATE OF FLORIDA, LICENSE NO. 58082

THIS ITEM HAS BEEN DIGITALLY SIGNED AND SEALED BY HENRYK B. JUSZCZYK, PROFESSIONAL ENGINEER, STATE OF FLORIDA, LICENSE NO. 58082 ON THE DATE INDICATED HERE. PRINTED COPIES OF THIS DOCUMENT ARE NOT CONSIDERED SIGNED AND SEALED AND THE SIGNATURE MUST BE VERIFIED ON ANY ELECTRONIC COPIES.

Henryk B Juszczyk
2019.08.22 23:12:36
-04'00'

ISSUE/REVISION

I/R	DATE	DESCRIPTION
0	AUG 23, 2019	CONSTRUCTION DOCUMENTS
	JUNE 7, 2019	35% DESIGN COMPLETION

PROJECT NUMBER

60601397

SHEET TITLE

ELECTRICAL POWER RISER

SHEET NUMBER

E4-1-01

NOTICE: THE OFFICIAL RECORD OF THIS SHEET IS THE ELECTRONIC FILE SIGNED AND SEALED UNDER RULE 61G15-23.004, F.A.C.

Printed on ___% Post-Consumer Recycled Content Paper
©2016 AECOM Corporation